CANDOCK G2 LINE CUBES
INSTRUCTION MANUAL

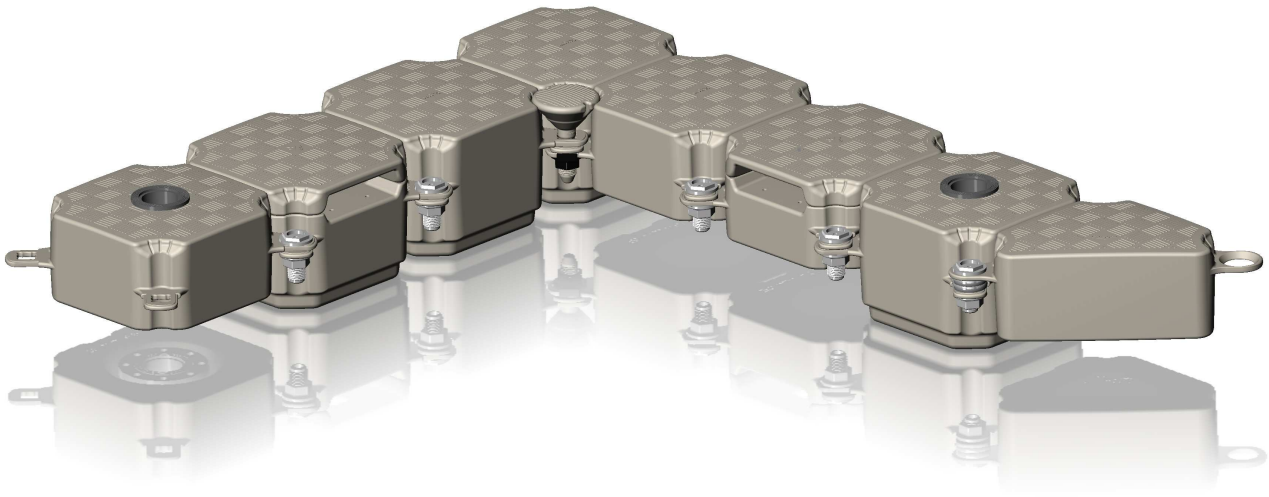

Here are some very important details regarding the assembly of Candock's dock system:

THE FOLLOWING INSTRUCTIONS ARE GUIDELINES TO BE FOLLOWED. CANDOCK WILL NOT BE RESPONSIBLE FOR DAMAGES INCURRED BY THE NON-COMPLIANCE WITH THESE GUIDELINES.

All distributors are required and responsible to provide theoretical and practical training to clients on the complete use of the different dock systems. Candock inc. can not be held responsible in any way for any damages resulting from the fact that the client has not received adequate training.

Presentation of Line G2:

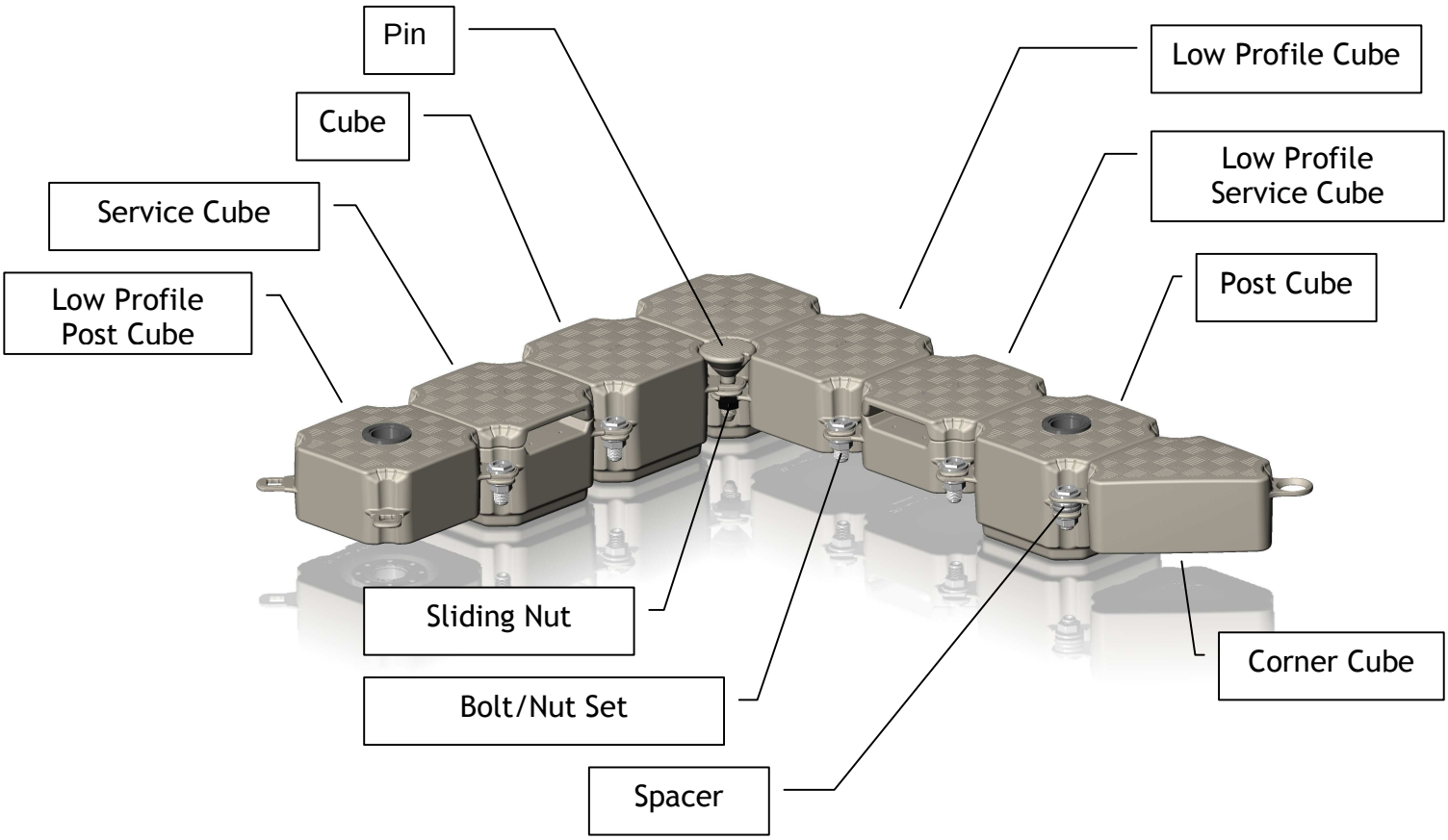

I) DESCRIPTION

A. Cube

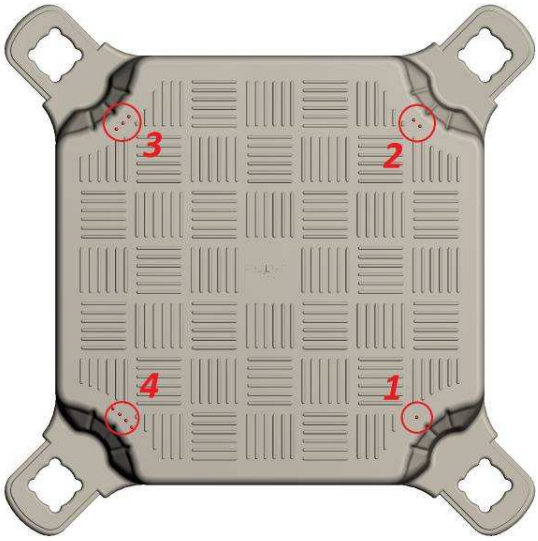

All products of the G2 line are fitted with 4 identified ears by dots on top of the cubes (in red on the drawing). The ear with 1dot being the lowest and 4 the highest.

Warning: On the Service Cube and Low Profile Service Cube, the identifications are directly on the ears. The corner cube is provided with only 3 ears which are not identified.

Each ear is provided with a slide for installing sliding nuts.

The G2 line is mainly divided into two classes: Cube and Low Profile Cube:

Cube	Low Profile Cube
Height : 36cm (14``) Side : 48cm (19``) x 48cm (19``)	Height : 23cm (9``) Side : 48cm (19``) x 48cm (19``)
Floating capacity* : 68kg (150pds)/cube or 272kg/m² (60pds/sq,ft)	Floating capacity* : 50kg (110pds)/cube or 210kg/m² (44pds/sq,ft)

*Data are provided for the Cubes and Low profile cubes and not their derivatives

G2 Connecting pin

The connecting pin is the main connector element in Candock docks. It was designed to absorb the deformations and other efforts due to the environment and weather.

To tighten the G2 pin, 2 cavities were designed on each side of the pin to allow the insertion of a Candock key.

B. Sliding Nut

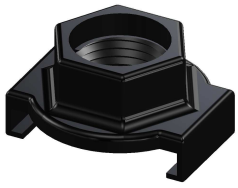

The Sliding Nut is the second essential connexion element for your Candock dock.

The Sliding Nut is used to assemble a minimum of 3 cubes. It is provided with two slides allowing it to slide on the lower ear of an assembly.

C. Spacer

The spacers allow to replace missing ears during the assembly of less than 4 cubes. Although, when assembling less than 3 cubes, it is possible that some space is created between the ears, that space is actually associated to the height of one or many ears. This space needs to be filled in order to guarantee an efficient assembly and optimum strength for your dock.

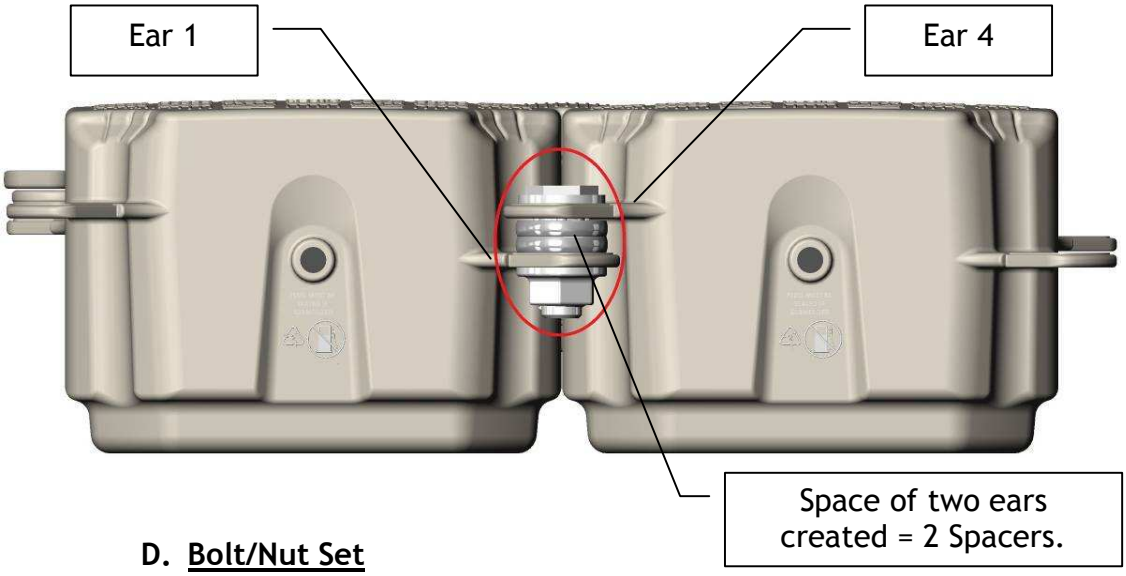

D. Bolt/Nut Set

Bolt/Nut set is made to position itself on the periphery of your Candock dock. The installation of these elements ensures better stability of the platform and durability. The use of bolts/nuts is required for:

- A dock with a JetSlide.
- A dock installed in an area subject to regular waves
- A dock subject to a high load

There are some Bolt derivatives in order to be adapted to different situations, such as: JetSlide lug connector and Chain Adjuster. For more information on those products, we invite you to contact you Candock dealer.

Candock has developed two tools making the installation easier: A key and a ratchet key.

E. Service Cube

Service cubes have been manufactured in order to allow for the installation of wiring and piping in your dock. They consist of a base and a cover.

As you can see on the picture, there is a base for cubes and for low profile cubes as well.

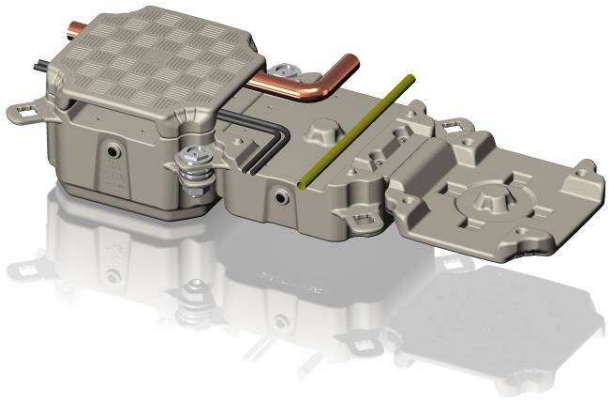

There are 2 types of Covers: Standard covers (left) and Side covers (right), provided with a hinge.

Standard covers have been developed to take place in the middle of your dock. They are fixed with G2 Connecting pins. All you need to do is to position the Cover on the service base and to fix the 4 G2 Connecting pins in order to maintain the cover.

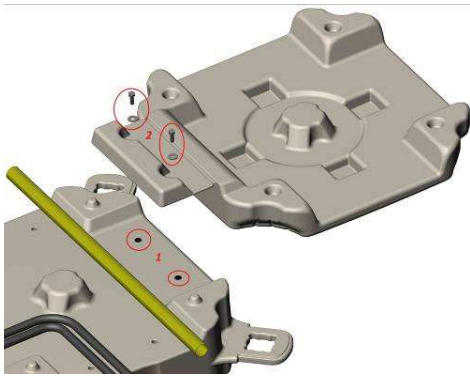

As the name says, Side covers have been developed to take place on the side of your dock. The hinge is installed on the water side. To fix the cover to the base, the inserts provided need to be screwed in the appropriate holes (1). Then screw the two nuts with the washers (2). **Candock recommends doing these operations manually or with a tool that does not have a lot of rigidity so that the base and the insert don't get damaged.**

F. Post Cube

Two sizes are available for the post cubes: Standard and Low profile

They have been created in order to anchor your dock in a maximum of 2m (7feet) of water using galvanized or stainless steel piles of 73mm (2inch7/8) OD, covered by a 89mm (3.5inch) OD and 76mm (3inch) ID.

To pile the metal pipes, we recommend you get the tools developed by Candock.

It is preferable to position the post cubes on the edge of the dock to maximize their stability.

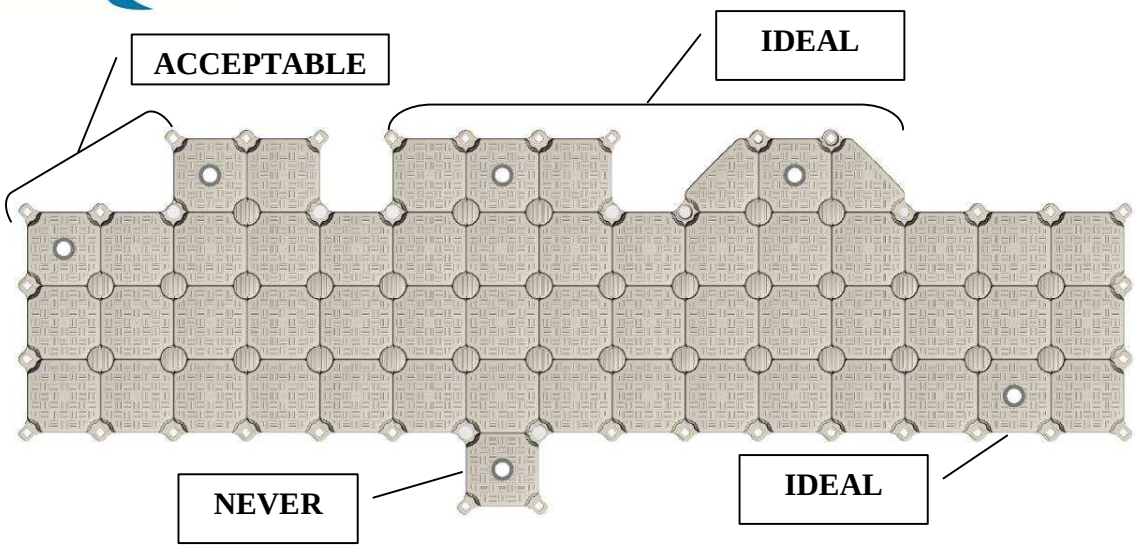

This drawing shows the ideal positions for your Post Cubes. They need to be apart a maximum of 10m (30 foot).

Before choosing the right solution to anchor your Post Cubes to your dock, it is important to verify the conditions of the sea bed. A rocky bottom will not allow you to pile the metal pipes. Moreover, when the waves are more than de 1m (3foot), this solution is not to be considered.

G. Corner Cube

The Corner Cube can be assembled on both G2 cubes and Low profile cubes. The position of the 3 ears on the cube will permit to position the cube in any configuration you wish. The ears will be placed above the number 4 ear of the cube. If the fourth ear is absent, it has to be filled with spacers, as well as any other ear that might be missing over the lowest ear available.

The next two pictures will illustrate the procedure for installing Candock Corner Cubes based on the situation that you may experience.

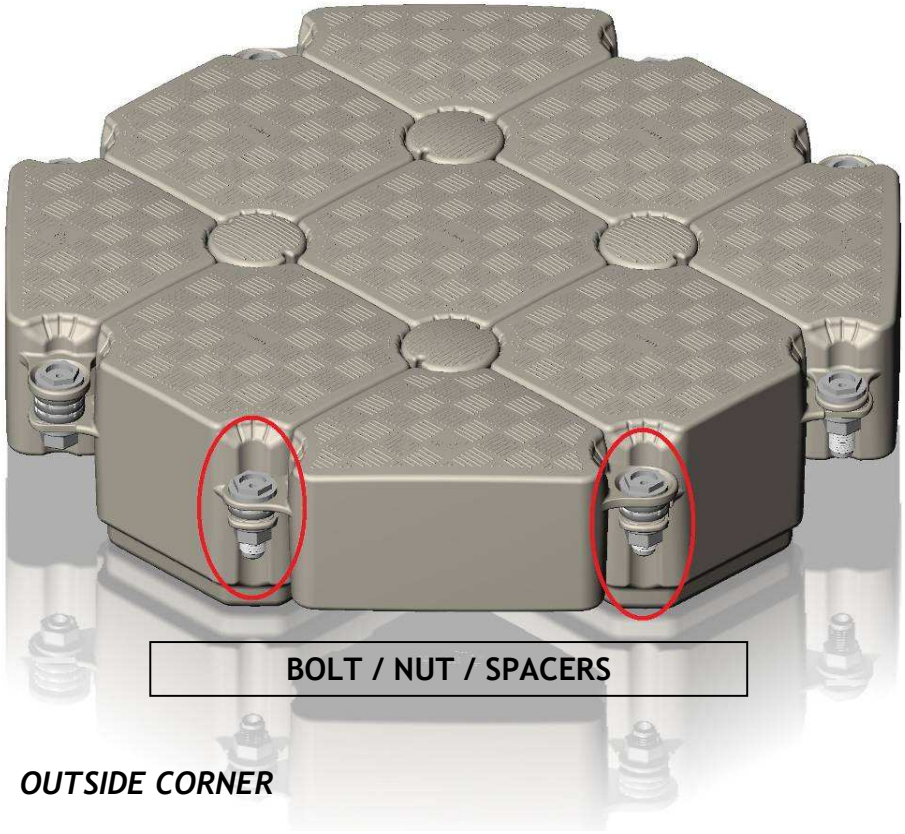

OUTSIDE CORNER

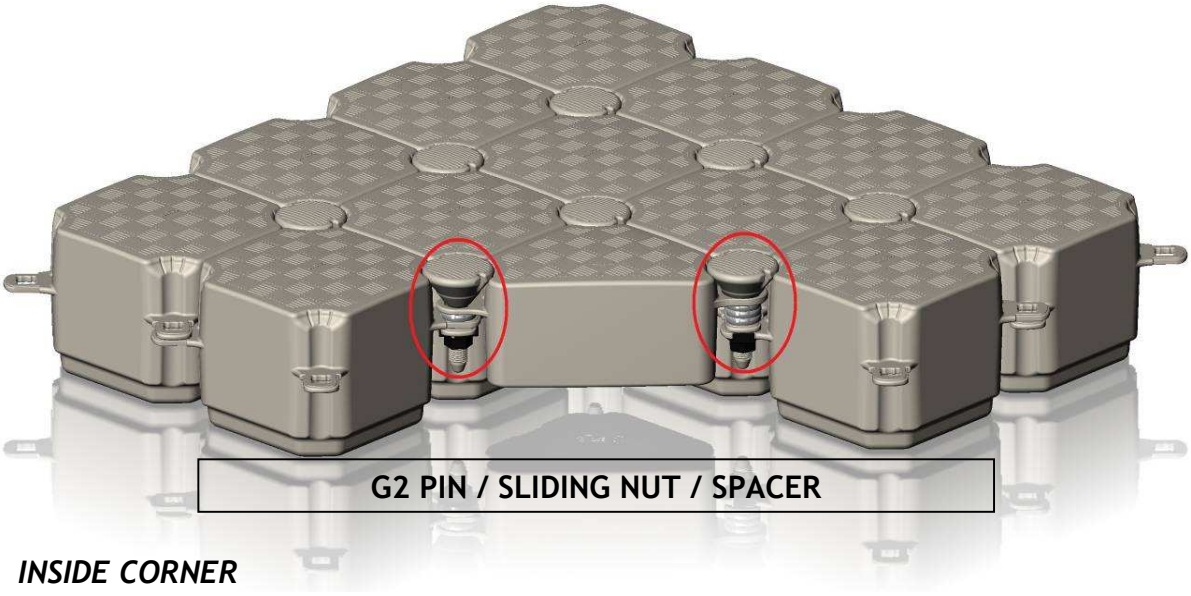

INSIDE CORNER

II) INSTALLATION

G2 Cubes and Low profile Cubes are shipped preassembled in sets of 6, including 2 G2 connecting pin and 2 sliding nuts.

Warning: This is not enough to assemble a dock more than 6 cubes.

A. Orientation

G2 Cubes come with a cap located between ears 1 and 4. During the installation of a dock, this cap always needs to be directed towards the shore. This orientation will permit to use less spacers and to improve the aesthetic of your dock.

Warning: if your dock is made of such sort that it goes along the shore, then the caps would be positioned on the shorter side.

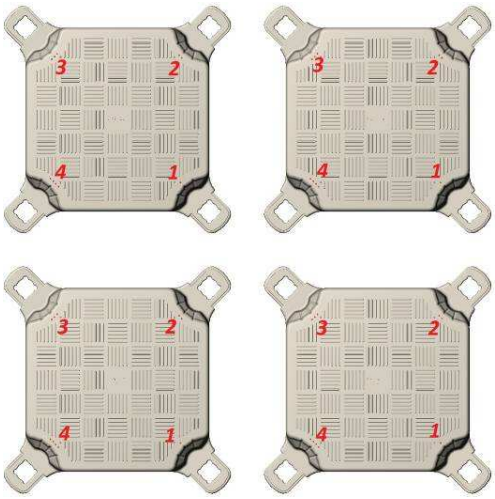

The following images shows the orientation of cubes relative to each other to complete the assembly.

The orientation of the ears is important. The arrangement at this point needs to be respected in order to obtain an appropriate assembly.

B. Assembling

Tips to start:

First of all, preassemble the dock on the ground and position the set Bolt/Nut on the corresponding side in the periphery of your dock if needed. This will help you to manage your time.

Candock has developed tools in order to make the assembly of your dock much easier:

Tolls	Picture	Use
Key for Nut		Installation of Candock's Nut and Bolt
Ratchet key for Nut		The ratchet key need to be used with a ratchet in order to install Candock's Nut and Bolt
Drill key for pin	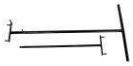	Manual Candock key and attachment for electric drill. Will allow screwing of G2 pins
Anchoring tools		This set will allow inserting and/or removing of piles.

To get those tools, please contact you Candock dealer.

The sliding nut and the G2 connecting pin will help you assemble the cubes.

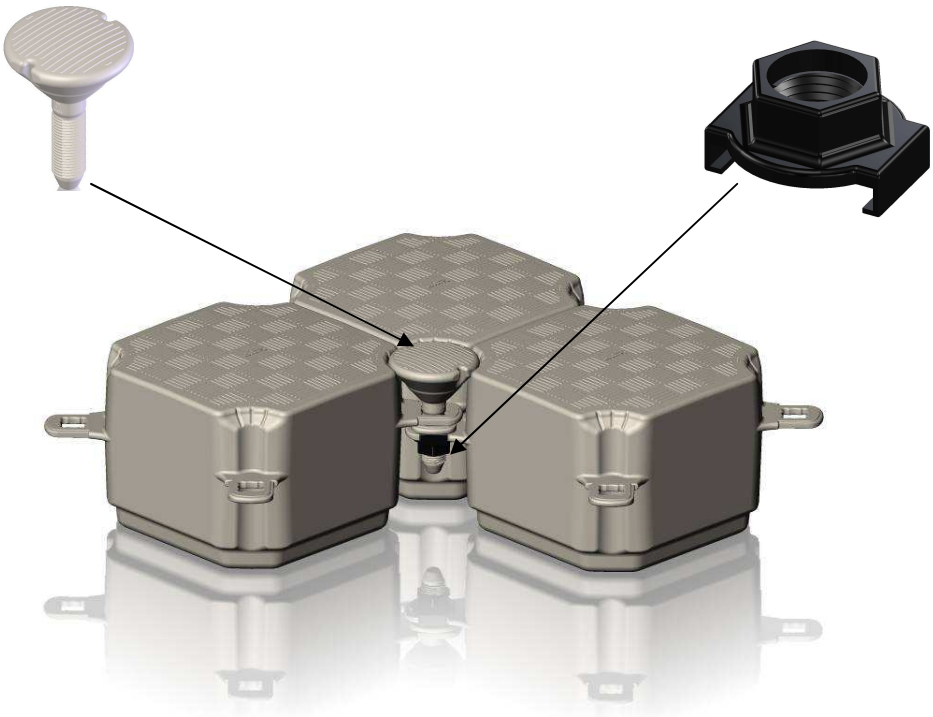

When assembling many cubes or several cube sections, the steps are:

1. Place the Sliding nuts on the lower ears.
2. Position the sections next to each other and ensure that the ears are positioned correctly.
3. Insert the screw in the ears and screw using the right tool.
4. Place, if necessary, Candock Bolts and Nuts in missing places on periphery of your dock. Remember to fill the space between two ears by a spacer, if necessary.

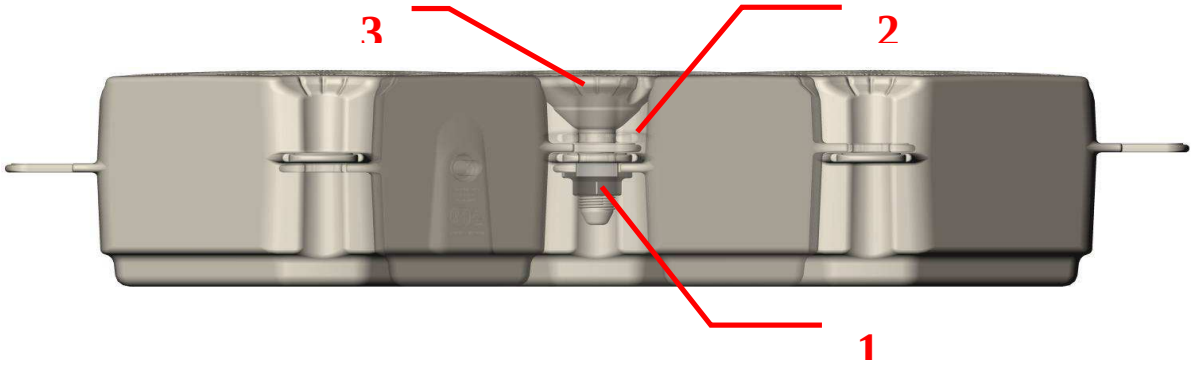

During the assembly, you can assemble two big sections, with the "Scissors technique". The first step stays the same.

Place a G2 connecting pin, as shown on the picture, then bring the two sections side by side by making sure that the ears connect correctly. Then insert the missing pins.

This technique will help you assemble big sections with ease.

If you wish to use a multi layer dock, in order to gain flotation, it is possible. To fix the cube layers to each other, you need to pass a 10mm (3/8inch) stainless steel threaded rod through a white bolt on each layer and fix them with nuts. Candock is offering this product; please contact your dealer for more information.

C. ***Anchoring***

A good anchoring is essential in order to optimise the stability and the lifetime of your Candock dock.

Candock is offering you few anchoring techniques below:

	Picture	Options	Application
Wall		Grey or Beige Color	Allow to anchor you Candock dock directly on a wooden structure, steel or concrete. May require a complementary anchoring depending on the dock's configuration. 
Concrete block ***Or*** ***Bottom anchor***	 		The anchoring pin attached to a concrete block is used for a permanent dock where there is no necessity to regularly adjust the anchoring. This anchoring is as well more aesthetic and has a high mechanic resistance.
			The anchoring ring is the strongest way to connect your dock to a concrete block. Fixation is done on the periphery of the dock. It allows you to adjust the anchoring with ease.
			The chain adjuster is less resistant than the anchoring ring. As the name says , it is used when you need to adjust the anchoring due to regular or seasonal water level fluctuations.
Post Cube		Post cube and low profile post cube, in Grey or Beige	The post cube allows for a solid anchoring in zones where waves are no more than 1m (3foot) and where the maximum depth is 2m (7foot). Warning: Before choosing this solution, make sure you don't have a rocky bottom. 

For anchoring using concrete blocks or bottom anchors, Candock is offering our elastic anchor ropes that can be adapted to waves, tidal variations and water level fluctuations.

Here are two examples of anchoring systems using the concrete blocks or bottom anchors. The first example is valid when the elastic ropes or flexible systems are used to connect the weight (or the bottom anchors) to the dock or if there are no changes in water level. You will notice that the chains or ropes linking the anchors or blocks to the dock are always crossed in order to optimize the stability of the dock and making sure that they are not in the way.

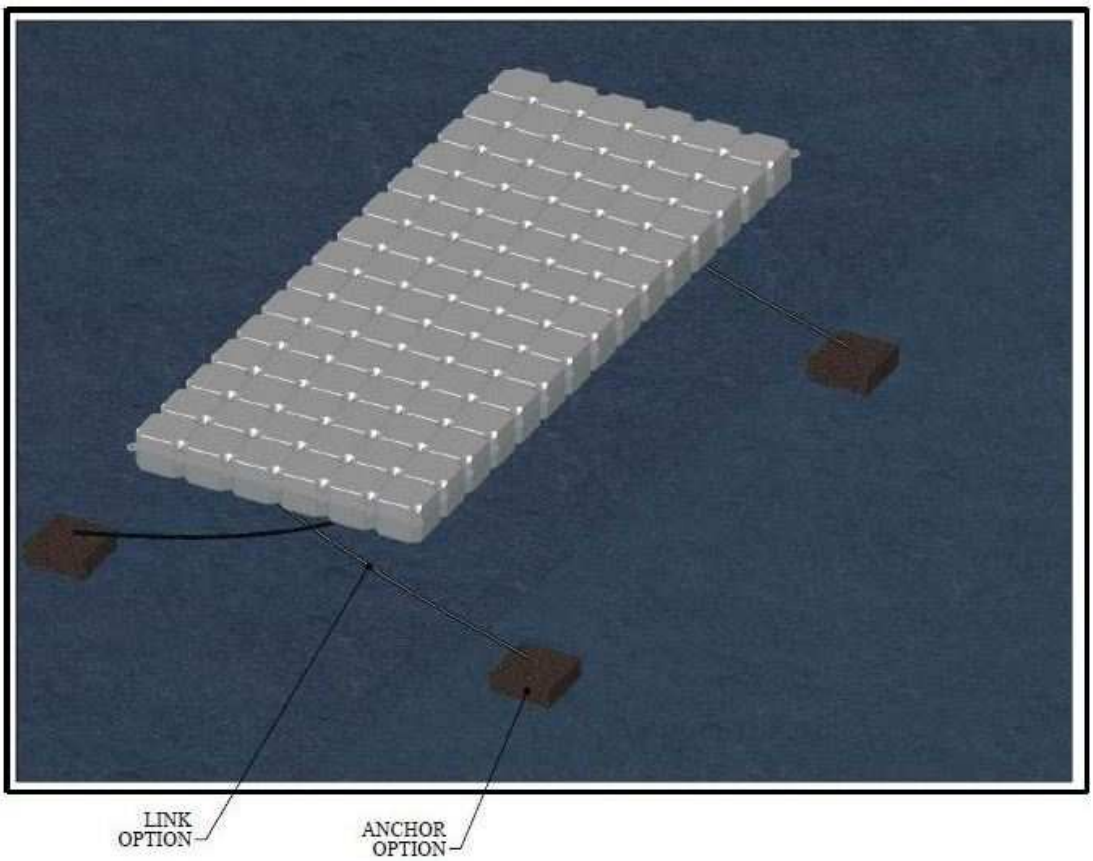

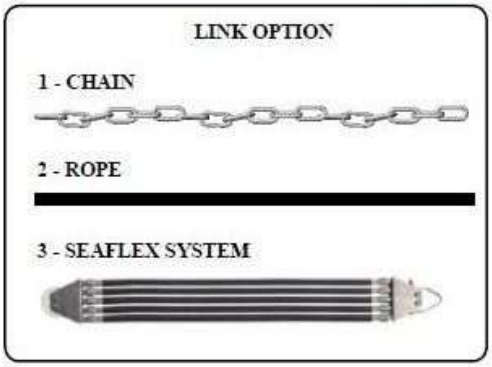

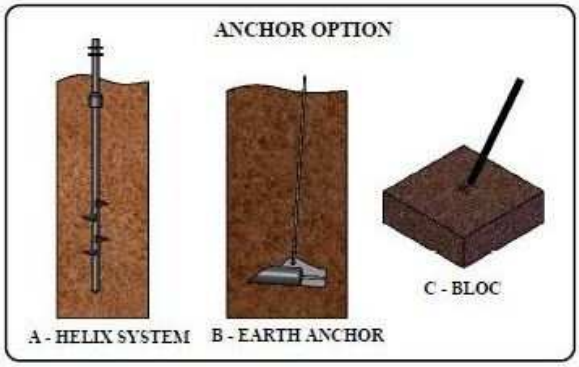

Using a secondary floating weight is necessary when attaching the concrete blocks or the bottom anchors directly to the dock with a chain or rope without using a tide management system (elastic rope). This floating weight will help to maintain a constant tension on the chain or the rope.

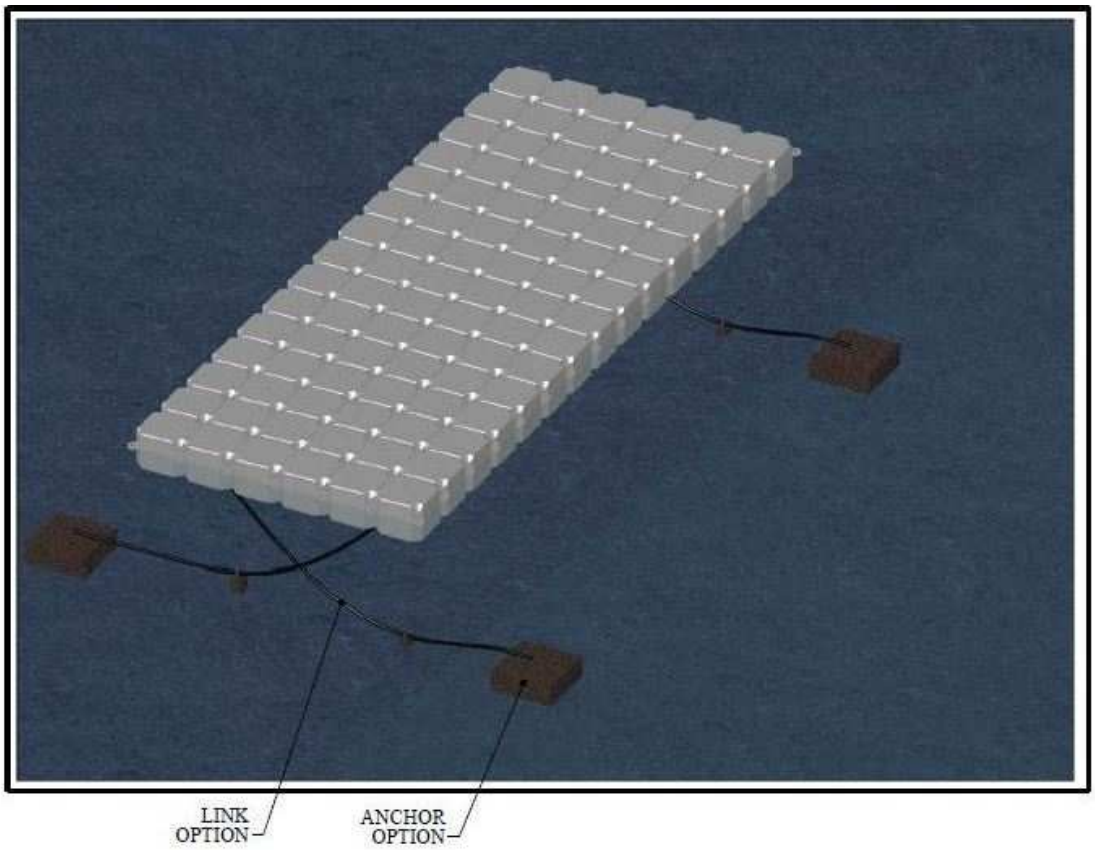

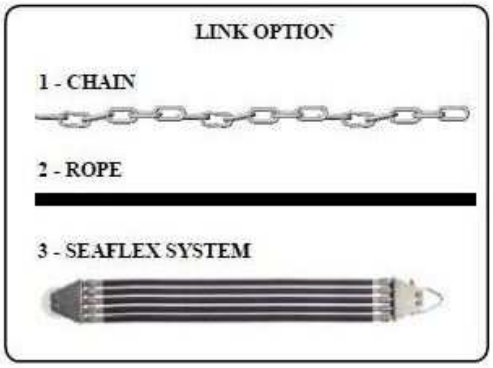

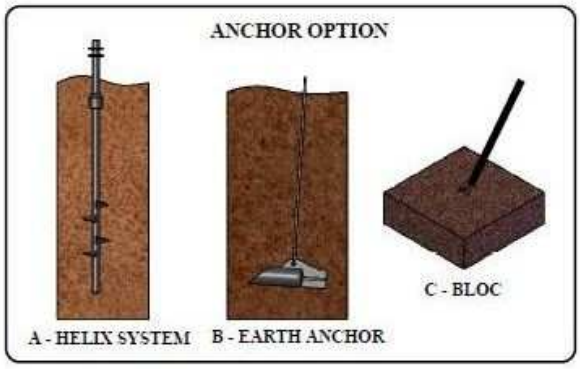

It happens sometimes that piles are already available where you wish to implant your Candock dock, or that you might need bigger piles. We offer you two different solutions, in order to use those piles.